Temperature Sensor：
Water Heater Applications

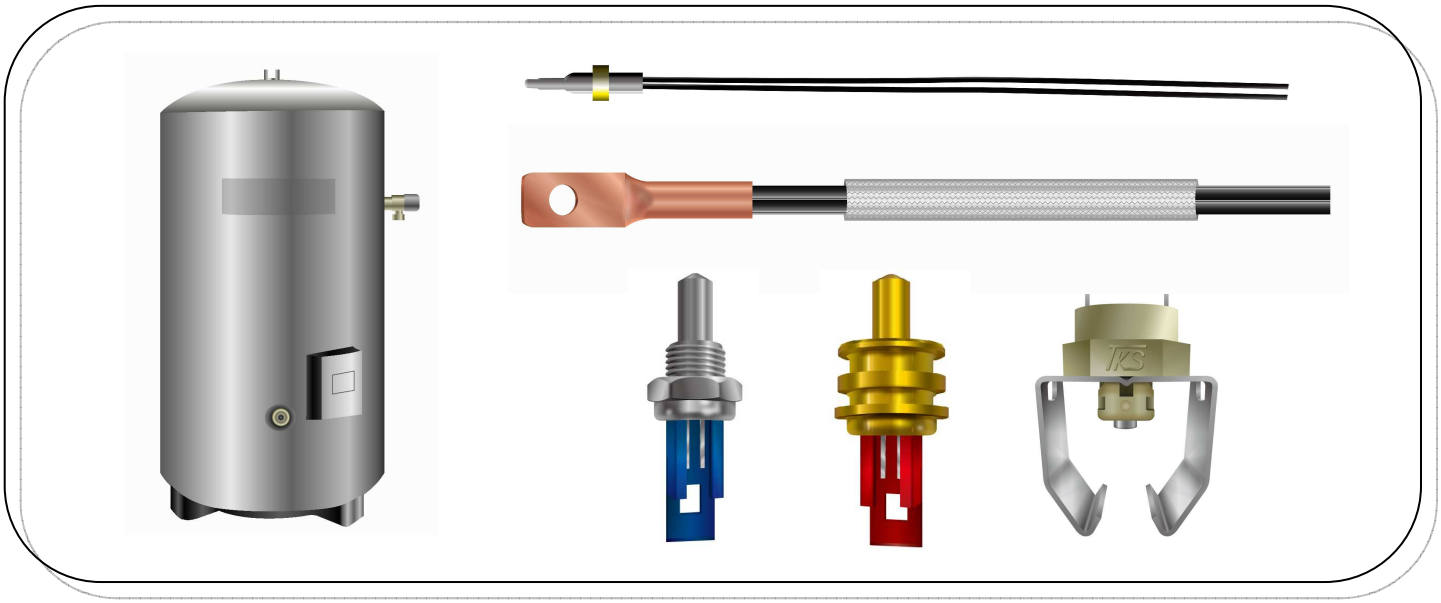

Features	• NTC thermistor potted into a metal case • Resistant to higher temperature and humid environments • Short thermal response time • Customizable sensor design of cable lengths, R/T characteristics, and connectors • Agency recognition: UL /cUL file no. E138827 , VDE file no. 40018581 (partial parts)
Applications	Water temperature measurement
Typical Applications	Electric water heater, gas water boiler in HVAC or domestic

1

Features	mounted on the pipe to measure fluid temperature		
Zero Power Resistance	R25:10KΩ	B25/85	3975K
Thermal Time Constant	10 sec. (in water)	Power Rating @ 25℃	100mW
Operation Temp. Range	-40~+105℃	Voltage Proof Test	1250Vac,3 sec

2

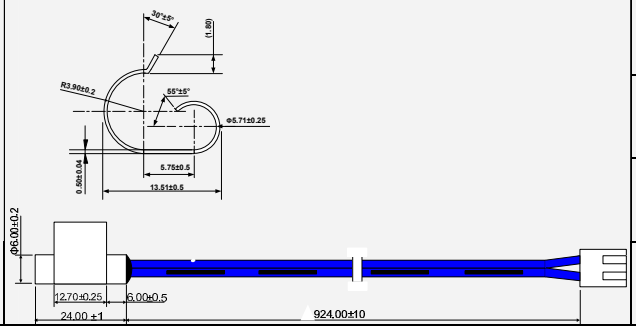

Features	mounted on the pipe to measure fluid temperature		
Zero Power Resistance	R25: 30KΩ	B25/85	3900K
Thermal Time Constant	10 sec. (in water)	Power Rating @ 25℃	240mW
Operation Temp. Range	-40~+105℃	Voltage Proof Test	1250Vac,3sec

Temperature Sensor：
Water Heater Applications

3	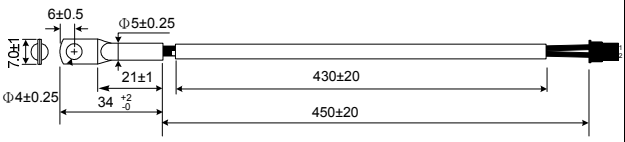	Features	Screw-on design for easy installation		
		Zero Power Resistance	R50:16.83~ 18.55KΩ	B25/85	3417K
		Thermal Time Constant	2 sec. (in water)	Power Rating @ 25℃	50mW
		Operation Temp. Range	-40~+105℃	Voltage Proof Test	1250Vac,3sec
4	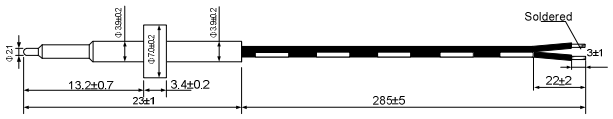	Features	Sensor can be soaked directly in the water to measure water (liquid) temperature		
		Zero Power Resistance	R50:3.485KΩ	B0/100	3970K
		Thermal Time Constant	2 sec. (in water)	Power Rating @ 25℃	40mW
		Operation Temp. Range	-20~+120℃	Voltage Proof Test	1500Vac,1sec
5	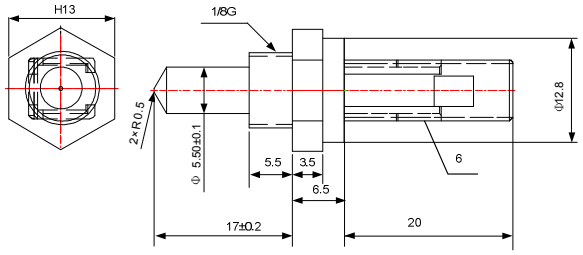	Features	Sensor can be soaked directly in the water to measure water (liquid) temperature		
		Zero Power Resistance	R25: 10KΩ	B25/85	3435K
		Thermal Time Constant	3 sec. (in water)	Power Rating @ 25℃	45mW
		Operation Temp. Range	-40~+125℃	Voltage Proof Test	2000Vac,2 sec
6	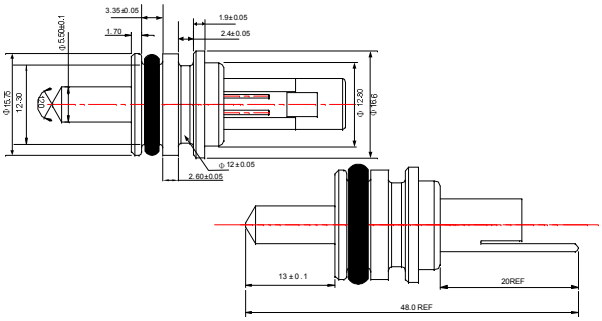	Features	Sensor can be soaked directly in the water to measure water (liquid) temperature		
		Zero Power Resistance	R25: 10KΩ	B25/85	3435K
		Thermal Time Constant	3 sec. (in water)	Power Rating @ 25℃	40mW
		Operation Temp. Range	-20~+110℃	Voltage Proof Test	2000Vac,2 sec
7	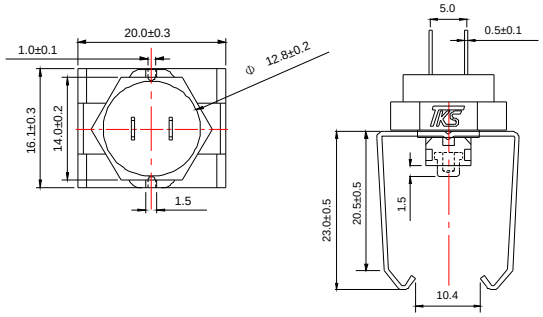	Features	Simple clip design for pipe mounting and easy installation		
		Zero Power Resistance	R25: 10KΩ	B25/85	3435K
		Thermal Time Constant	2 sec. (in water)	Power Rating @ 25℃	40mW
		Operation Temp. Range	-20~+120℃	Voltage Proof Test	1000Vac, 1 sec