fischer elektronik

Cooling aggregates with axial fan

Hollow-fin cooling aggregates

- geometry of hollow fin optimising the air flow
- particularly effective heat dissipation
- compact construction
- milled flat semiconductor mounting surface
- other fan types and fan voltages on request

art. no.

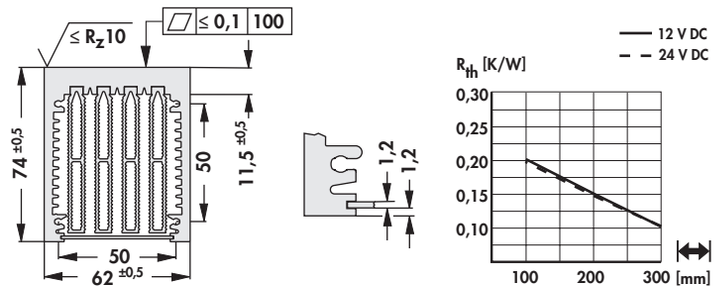

LA 6 ... without air flow chamber

art. no.

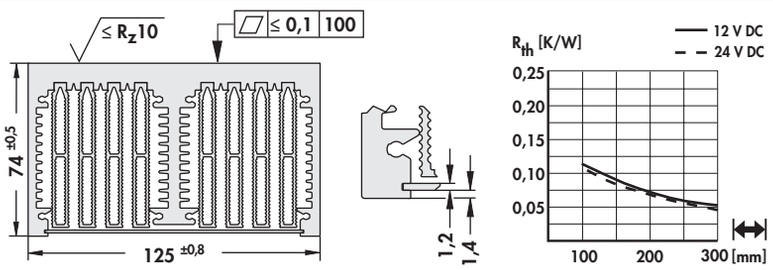

LA 7 ... without air flow chamber

art. no.

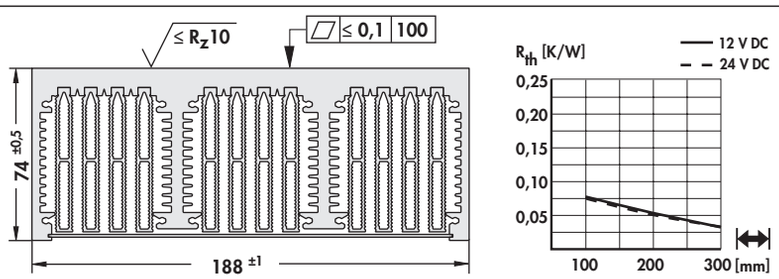

LA 8 ... without air flow chamber

please indicate: **... ↔** **100 150 200 250 300 mm**

... fan type
12 = 12 V DC
24 = 24 V DC

Technical data of the fans

	... 12	**... 24**
type	ebmpapst 612 NHH-118	ebmpapst 614 NHH-119
dimensions	60x60x25 mm	60x60x25 mm
tension	12 V DC	24 V DC
power inout	2.9 W	2.9 W
max. air volume	56 m^3/h	56 m^3/h
temperature range	-20°C... +70°C	-20°C... +70°C
noise level	41 dB(A)	41 dB(A)
speed	6,800 min^{-1}	6,850 min^{-1}
weight	66 g	66 g
failure rate (L_{10})	L_{10} > 60,000 h (40°C)	L_{10} > 60,000 h (40°C)

EL.ITALIA
www.elitaliaweb.it
info@elitaliaweb.it
+39 0233611626

Cooling aggregates with axial fan

Hollow-fin cooling aggregates

- geometry of hollow fin optimising the air flow
- particularly effective heat dissipation
- compact construction
- milled flat semiconductor mounting surface
- other fan types and fan voltages on request

art. no.

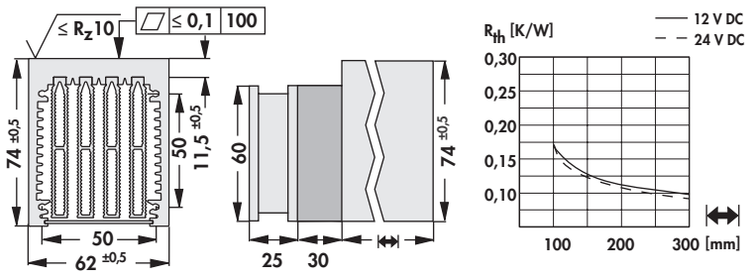

LA V 6 ... with air flow chamber

art. no.

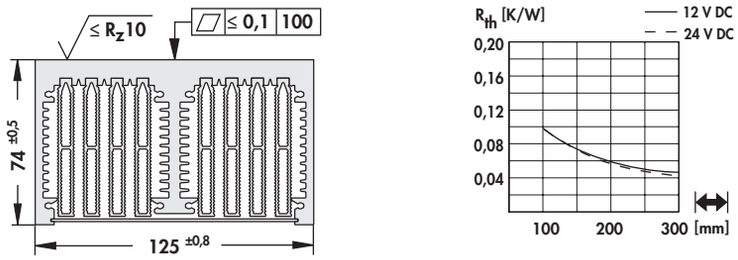

LA V 7 ... with air flow chamber

art. no.

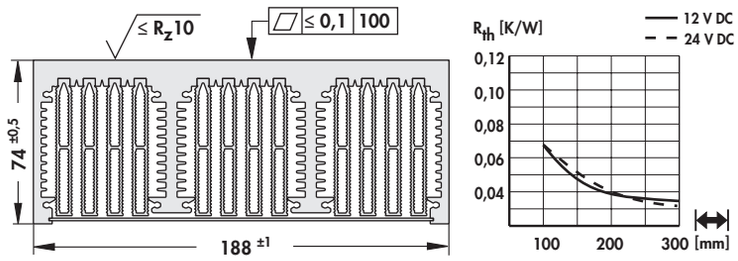

LA V 8 ... with air flow chamber

please indicate: **... ↔** **100 150 200 250 300 mm** **... fan type** **12 = 12 V DC** **24 = 24 V DC**

Technical data of the fans

	... 12	**... 24**
type	ebmpapst 612 NHH-118	ebmpapst 614 NHH-119
dimensions	60x60x25 mm	60x60x25 mm
tension	12 V DC	24 V DC
power inout	2.9 W	2.9 W
max. air volume	56 m^3/h	56 m^3/h
temperature range	-20°C... +70°C	-20°C... +70°C
noise level	41 dB(A)	41 dB(A)
speed	6,800 min^{-1}	6,850 min^{-1}
weight	66 g	66 g
failure rate (L_{10})	L_{10} > 60,000 h (40°C)	L_{10} > 60,000 h (40°C)

EL.ITALIA
www.elitaliaweb.it
info@elitaliaweb.it
+39 0233611626

fischer elektronik

Cooling aggregates with axial fan

Hollow-fin cooling aggregates

- geometry of hollow fin optimising the air flow
- particularly effective heat dissipation
- compact construction
- milled flat semiconductor mounting surface
- other fan types and fan voltages on request

art. no.

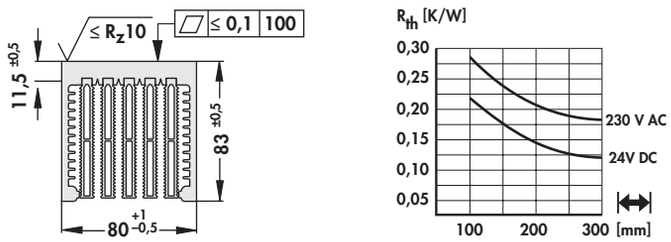

LA 9 ... without air flow chamber

art. no.

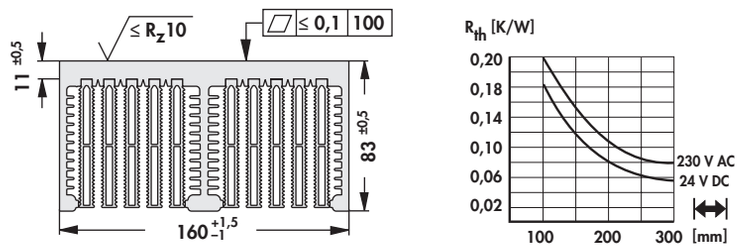

LA 10 ... without air flow chamber

art. no.

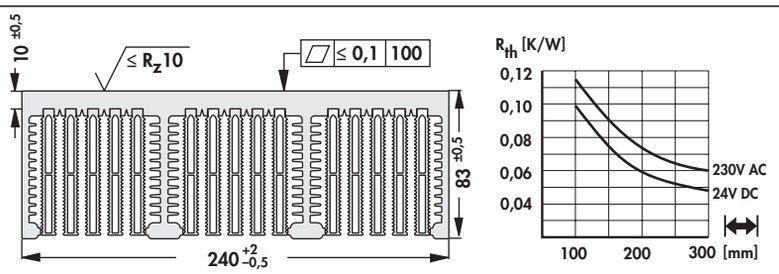

LA 11 ... without air flow chamber

please indicate: **... ⟷** **100 150 200 250 300 mm**

... fan type
24 = 24 V DC
230 = 230 V AC

Technical data of the fans

	... 24	**... 230**
type	ebmpapst 8314H	ebmpapst 8556N
dimensions	80x80x32 mm	80x80x38 mm
tension	24 V DC	230 V AC
power inout	6 W	12 W
max. air volume	80 m^3/h	50 m^3/h
temperature range	-20°C... 75°C	-40°C... +90°C
noise level	48 dB(A)	31 dB(A)
speed	5,000 min^{-1}	2,800 min^{-1}
weight	170 g	490 g
failure rate (L_{10})	L_{10} > 55,000 h (40°C)	L_{10} > 52,500 h (40°C)

EL.ITALIA
www.elitaliaweb.it
info@elitaliaweb.it
+39 0233611626

Cooling aggregates with axial fan

Hollow-fin cooling aggregates

- geometry of hollow fin optimising the air flow
- particularly effective heat dissipation
- compact construction
- milled flat semiconductor mounting surface
- other fan types and fan voltages on request

art. no.		
LA V 9 ...		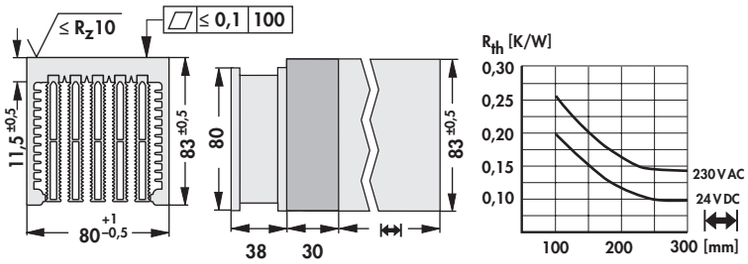
	with air flow chamber	
art. no.		
LA V 10 ...		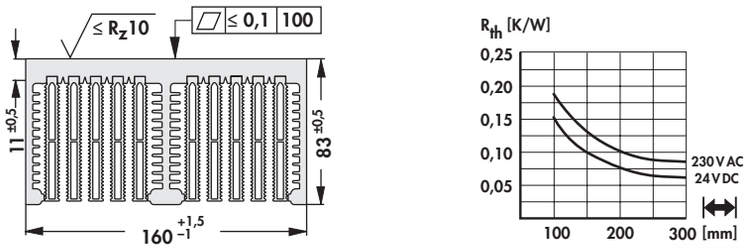
	with air flow chamber	
art. no.		
LA V 11 ...		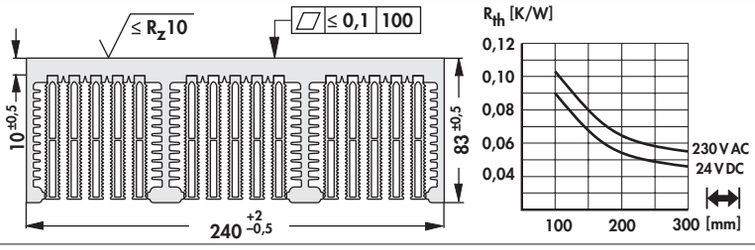
	with air flow chamber	

please indicate: **... ⟷** **100 150 200 250 300 mm**

... fan type
24 = 24 V DC
230 = 230 V AC

Technical data of the fans

	... 24	... 230
type	ebmpapst 8314H	ebmpapst 8556N
dimensions	80x80x32 mm	80x80x38 mm
tension	24 V DC	230 V AC
power inout	6 W	12 W
max. air volume	80 m^3/h	50 m^3/h
temperature range	-20°C... 75°C	-40°C... +90°C
noise level	48 dB(A)	31 dB(A)
speed	5,000 min^{-1}	2,800 min^{-1}
weight	170 g	490 g
failure rate (L_{10})	L_{10} > 55,000 h (40°C)	L_{10} > 52,500 h (40°C)

EL.ITALIA
www.elitaliaweb.it
info@elitaliaweb.it
+39 0233611626

fischer elektronik

Cooling aggregates with axial fan

Hollow-fin cooling aggregates

- hollow-fin geometry of new conception
- enlarged surface due to larger fin quantity
- effective heat dissipation with low pressure drop
- available with and without air-flow chamber
- milled flat semiconductor mounting surface
- mechanical treatments according to customer's specifications

art. no.

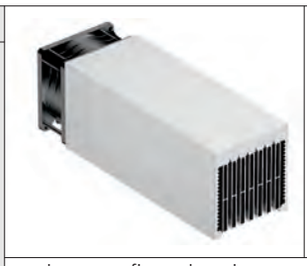

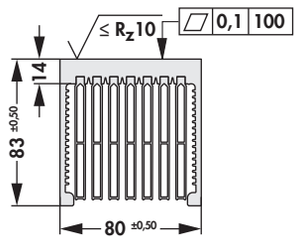

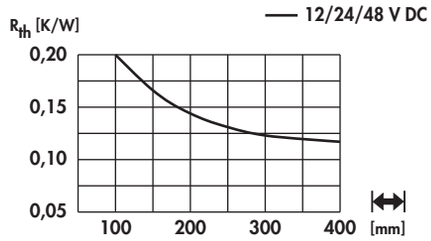

LA 34 ... without air flow chamber

art. no.

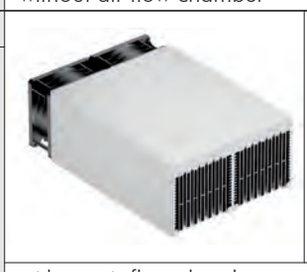

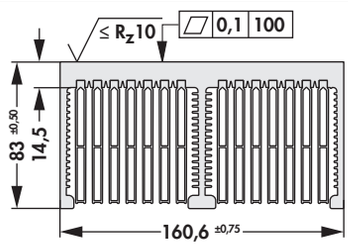

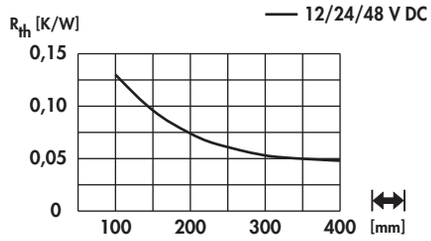

LA 35 ... without air flow chamber

please indicate: **... ↔** **100 150 200 250 300 mm**

... fan type
12 = 12 V DC
24 = 24 V DC
48 = 48 V DC

Technical data of the fans

	... 12	... 24	... 48
type	ebmpapst 8212 JH4	ebmpapst 8214 JH4	ebmpapst 8218 JH4
dimensions	80x80x38 mm	80x80x38 mm	80x80x38 mm
tension	12 V DC	24 V DC	48 V DC
power inout	39 W	38 W	36 W
max. air volume	222 m^3/h	222 m^3/h	222 m^3/h
temperature range	-20°C... +70°C	-20°C... +70°C	-20°C... +70°C
noise level	71 dB(A)	71 dB(A)	71 dB(A)
speed	14,000 min^{-1}	14,000 min^{-1}	14,000 min^{-1}
weight	200 g	200 g	200 g
failure rate (L_{10})	L_{10} > 50,000 h (40°C)	L_{10} > 50,000 h (40°C)	L_{10} > 50,000 h (40°C)

EL.ITALIA
www.elitaliaweb.it
info@elitaliaweb.it
+39 0233611626

Cooling aggregates with axial fan

Hollow-fin cooling aggregates

- hollow-fin geometry of new conception
- enlarged surface due to larger fin quantity
- effective heat dissipation with low pressure drop
- available with and without air-flow chamber
- milled flat semiconductor mounting surface
- mechanical treatments according to customer's specifications

art. no.

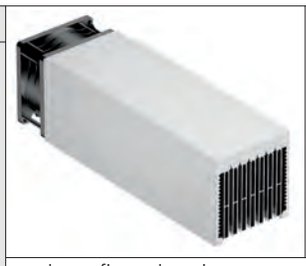

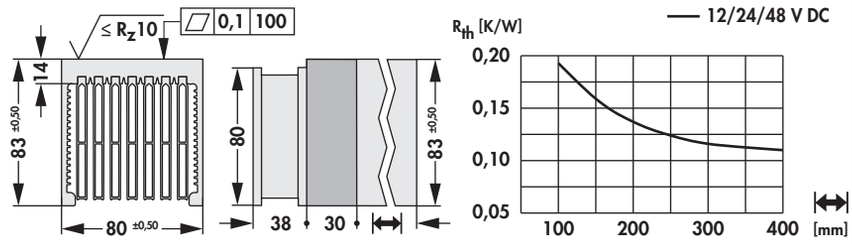

LA V 34 ...

with air flow chamber

art. no.

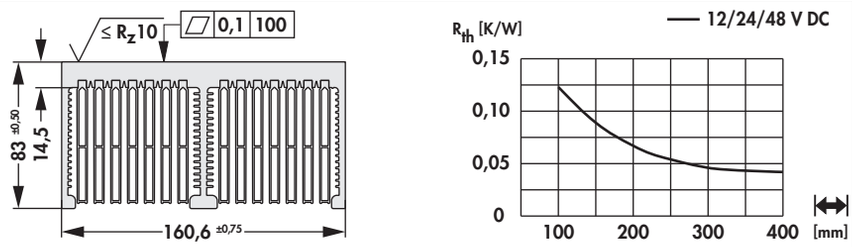

LA V 35 ...

with air flow chamber

please indicate: **... ⟷** **100 150 200 250 300 mm**

... fan type
12 = 12 V DC
24 = 24 V DC
48 = 48 V DC

Technical data of the fans

	... 12	**... 24**	**... 48**
type	ebmpapst 8212 JH4	ebmpapst 8214 JH4	ebmpapst 8218 JH4
dimensions	80x80x38 mm	80x80x38 mm	80x80x38 mm
tension	12 V DC	24 V DC	48 V DC
power inout	39 W	38 W	36 W
max. air volume	222 m^3/h	222 m^3/h	222 m^3/h
temperature range	-20°C... +70°C	-20°C... +70°C	-20°C... +70°C
noise level	71 dB(A)	71 dB(A)	71 dB(A)
speed	14,000 min^{-1}	14,000 min^{-1}	14,000 min^{-1}
weight	200 g	200 g	200 g
failure rate (L_{10})	L_{10} > 50,000 h (40°C)	L_{10} > 50,000 h (40°C)	L_{10} > 50,000 h (40°C)

EL.ITALIA
www.elitaliaweb.it
info@elitaliaweb.it
+39 0233611626

fischer elektronik

Cooling aggregates with axial fan

Hollow-fin cooling aggregates

- extremly low losses due to optimised hollow fin geometry
- particularly effective heat dissipation
- compact design with axial fan
- milled flat semiconductor mounting surface
- addtional design to customer's intructions
- other fan types and fan voltages on request

art. no.

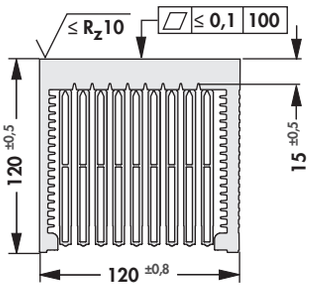

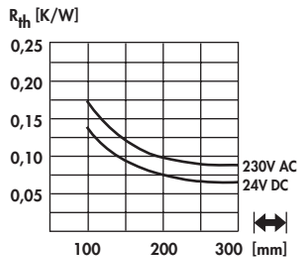

LA 14 ... without air flow chamber

art. no.

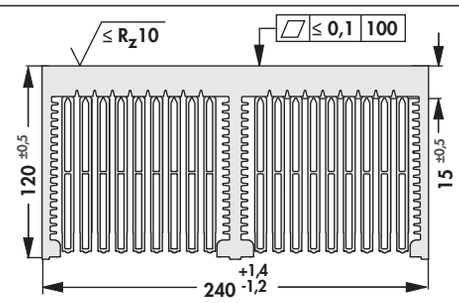

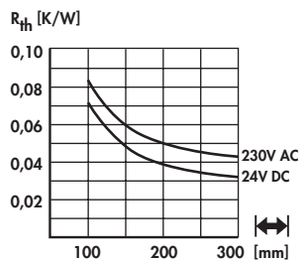

LA 15 ... without air flow chamber

please indicate: **... ⟷** **100 150 200 250 300 400 mm**

... fan type
24 = 24 V DC
230 = 230 V AC

Technical data of the fans

	... 24	**... 230**
type	ebmpapst 4184NXH	ebmpapst 4656N
dimensions	119x119x38 mm	119x119x38 mm
tension	24 V DC	230 V AC
power inout	11 W	19 W
max. air volume	237 m^3/h	160 m^3/h
temperature range	-30°C ... +70°C	-40°C... +85°C
noise level	57 dB(A)	47 dB(A)
speed	4,400 min^{-1}	2,650 min^{-1}
weight	390 g	550 g
failure rate (L_{10})	L_{10} > 70,000 h (40°C)	L_{10} > 37,500 h (40°C)

EL.ITALIA
www.elitaliaweb.it
info@elitaliaweb.it
+39 0233611626

Cooling aggregates with axial fan

Hollow-fin cooling aggregates

- extremly low losses due to optimised hollow fin geometry
- particularly effective heat dissipation
- compact design with axial fan
- milled flat semiconductor mounting surface
- addtional design to customer's intructions on request
- other fan types and fan voltages on request

art. no.

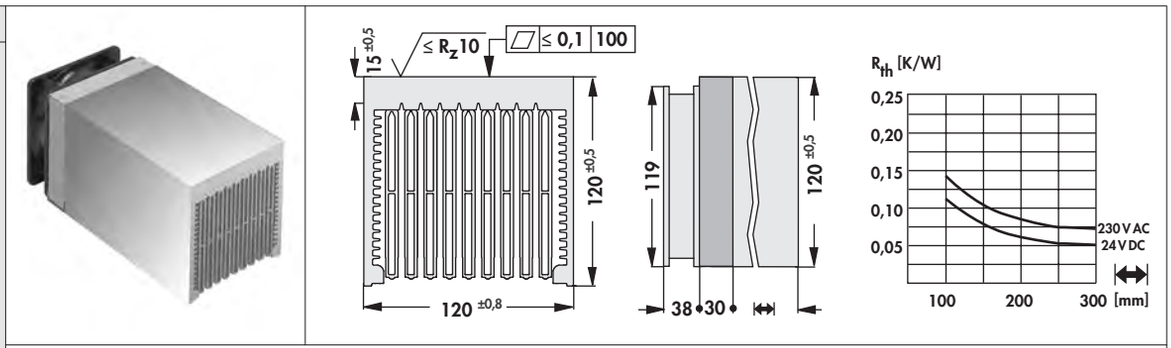

LA V 14 ... with air flow chamber

art. no.

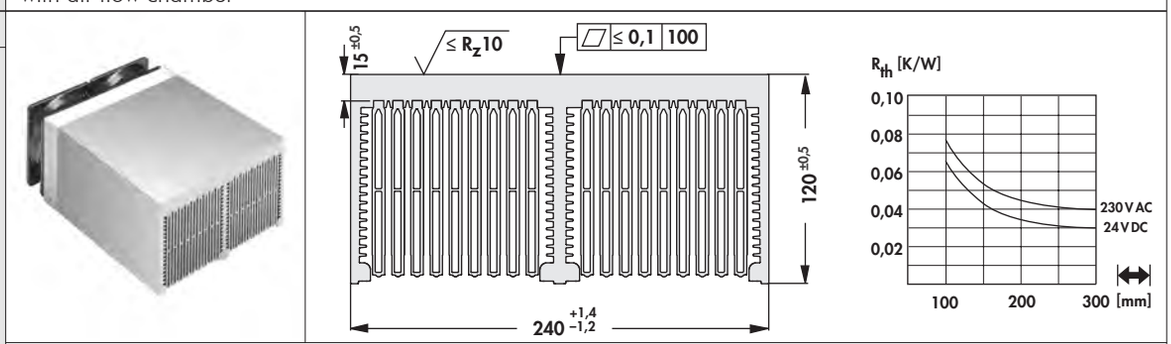

LA V 15 ... with air flow chamber

please indicate: **... ⟷** **100 150 200 250 300 400 mm**

... fan type
24 = 24 V DC
230 = 230 V AC

Technical data of the fans

	... 24	**... 230**
type	ebmpapst 4184NXH	ebmpapst 4656N
dimensions	119x119x38 mm	119x119x38 mm
tension	24 V DC	230 V AC
power inout	11 W	19 W
max. air volume	237 m^3/h	160 m^3/h
temperature range	-30°C ... +70°C	-40°C... +85°C
noise level	57 dB(A)	47 dB(A)
speed	4,400 min^{-1}	2,650 min^{-1}
weight	390 g	550 g
failure rate (L_{10})	L_{10} > 70,000 h (40°C)	L_{10} > 37,500 h (40°C)

EL.ITALIA
www.elitaliaweb.it
info@elitaliaweb.it
+39 0233611626

fischer elektronik

Cooling aggregates with axial fan

Hollow-fin cooling aggregates

- extremly low losses due to optimised hollow fin geometry
- effective heat dissipation
- compact construction with axial fans
- two oposite mounting surfaces are milled flat
- additional treatment upon customer's request
- other fan types and fan voltages on request

art. no.

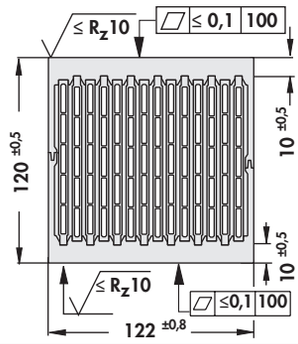

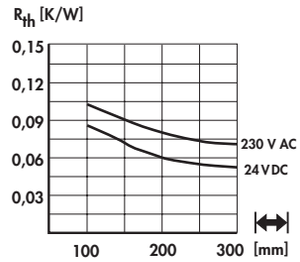

LA 17 ...

without air flow chamber

art. no.

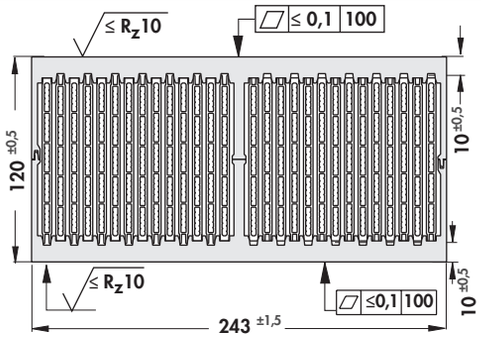

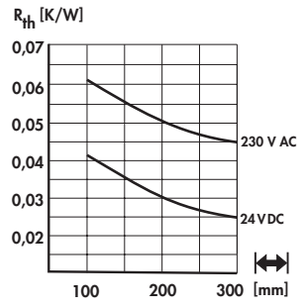

LA 18 ...

without air flow chamber

please indicate: **... ↔** **100 150 200 250 300 400 mm**

... fan type
24 = 24 V DC
230 = 230 V AC

Technical data of the fans

	... 24	**... 230**
type	ebmpapst 4184NXH	ebmpapst 4656N
dimensions	119x119x38 mm	119x119x38 mm
tension	24 V DC	230 V AC
power inout	11 W	19 W
max. air volume	237 m^3/h	160 m^3/h
temperature range	-30°C ... +70°C	-40°C... +85°C
noise level	57 dB(A)	47 dB(A)
speed	4,400 min^{-1}	2,650 min^{-1}
weight	390 g	550 g
failure rate (L_{10})	L_{10} > 70,000 h (40°C)	L_{10} > 37,500 h (40°C)

EL.ITALIA
www.elitaliaweb.it
info@elitaliaweb.it
+39 0233611626

Cooling aggregates with axial fan

Hollow-fin cooling aggregates

- extremly low losses due to optimised hollow fin geometry
- effective heat dissipation
- compact construction with axial fans
- two oposite mounting surfaces are milled flat
- additional treatment upon customer's request
- other fan types and fan voltages on request

art. no.

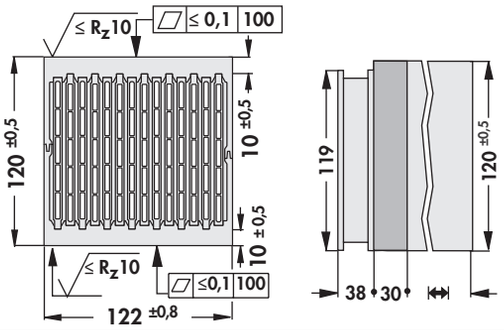

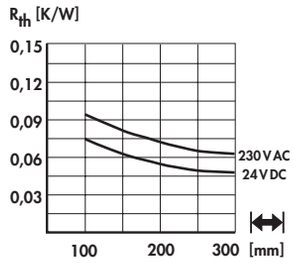

LA V 17 ... with air flow chamber

art. no.

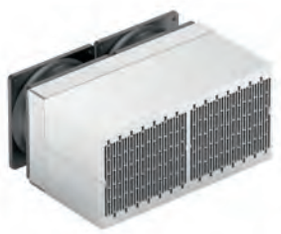

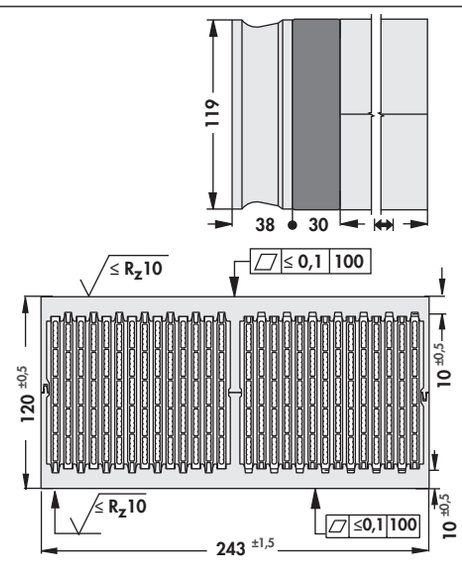

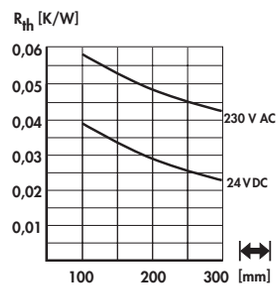

LA V 18 ... with air flow chamber

please indicate: **... ↔** **100 150 200 250 300 400 mm**

... fan type
24 = 24 V DC
230 = 230 V AC

Technical data of the fans

	... 24	**... 230**
type	ebmpapst 4184NXH	ebmpapst 4656N
dimensions	119x119x38 mm	119x119x38 mm
tension	24 V DC	230 V AC
power inout	11 W	19 W
max. air volume	237 m^3/h	160 m^3/h
temperature range	-30°C ... +70°C	-40°C... +85°C
noise level	57 dB(A)	47 dB(A)
speed	4,400 min^{-1}	2,650 min^{-1}
weight	390 g	550 g
failure rate (L_{10})	L_{10} > 70,000 h (40°C)	L_{10} > 37,500 h (40°C)

EL.ITALIA
www.elitaliaweb.it
info@elitaliaweb.it
+39 0233611626

fischer elektronik

Cooling aggregates with axial fan

Hollow-fin cooling aggregates

- extremly low losses due to optimised hollow fin geometry
- effective heat dissipation
- compact construction with axial fans
- two oposite mounting surfaces are milled flat
- additional treatment upon customer's request
- other fan types and fan voltages on request

art. no.

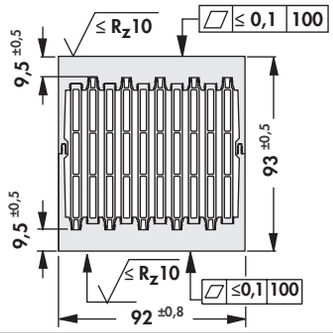

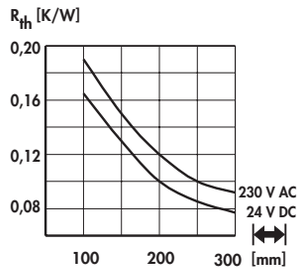

LA 21 ...

without air flow chamber

art. no.

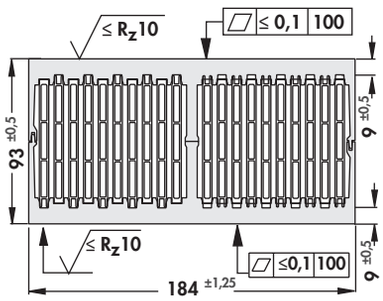

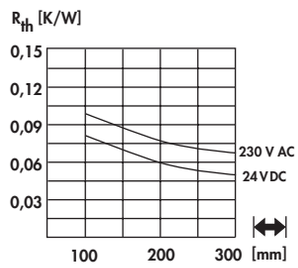

LA 22 ...

without air flow chamber

please indicate: **... ⟷** **100 150 200 250 300 400 mm**

... fan type
24 = 24 V DC
230 = 230 V AC

Technical data of the fans

	... 24	**... 230**
type	ebmpapst 3314 NHH	ebmpapst 3656
dimensions	92x92x32 mm	92x92x38 mm
tension	24 V DC	230 V AC
power inout	3.4 W	12 W
max. air volume	107 m^3/h	75 m^3/h
temperature range	-20°C... 75°C	-40°C... +75°C
noise level	42 dB(A)	37 dB(A)
speed	3,450 min^{-1}	2,700 min^{-1}
weight	190 g	420 g
failure rate (L_{10})	L_{10} > 57,500 h (40°C)	L_{10} > 52,500 h (40°C)

EL.ITALIA
www.elitaliaweb.it
info@elitaliaweb.it
+39 0233611626

Cooling aggregates with axial fan

Hollow-fin cooling aggregates

- extremly low losses due to optimised hollow fin geometry
- effective heat dissipation
- compact construction with axial fans
- two oposite mounting surfaces are milled flat
- additional treatment upon customer's request
- other fan types and fan voltages on request

art. no.

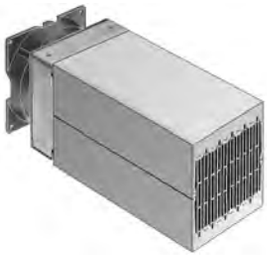

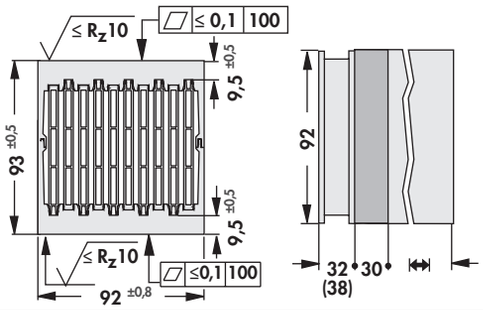

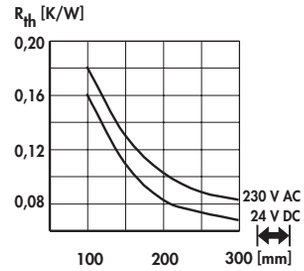

LA V 21 ... with air flow chamber

art. no.

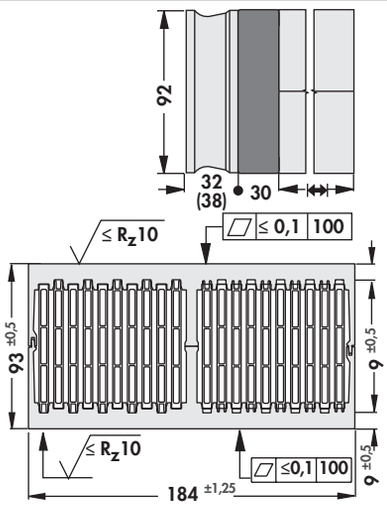

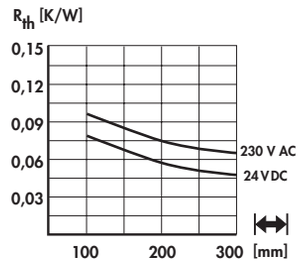

LA V 22 ... with air flow chamber

please indicate: **... ⟷** **100 150 200 250 300 400 mm**

... fan type
24 = 24 V DC
230 = 230 V AC

Technical data of the fans

	... 24	**... 230**
type	ebmpapst 3314 NHH	ebmpapst 3656
dimensions	92x92x32 mm	92x92x38 mm
tension	24 V DC	230 V AC
power inout	3.4 W	12 W
max. air volume	107 m^3/h	75 m^3/h
temperature range	-20°C... 75°C	-40°C... +75°C
noise level	42 dB(A)	37 dB(A)
speed	3,450 min^{-1}	2,700 min^{-1}
weight	190 g	420 g
failure rate (L_{10})	L_{10} > 57,500 h (40°C)	L_{10} > 52,500 h (40°C)

EL.ITALIA
www.elitaliaweb.it
info@elitaliaweb.it
+39 0233611626

fischer elektronik

Cooling aggregates with axial fan

Hollow-fin cooling aggregates

- extremly low losses due optimised hollow fin geometry
- especially effective heat dissipation
- compact construction with axial fans
- two oposite mounting surfaces are miled flat
- additional treatment upon customer's request
- other fan types and fan voltages on request

art. no.		
LA V 24 ...		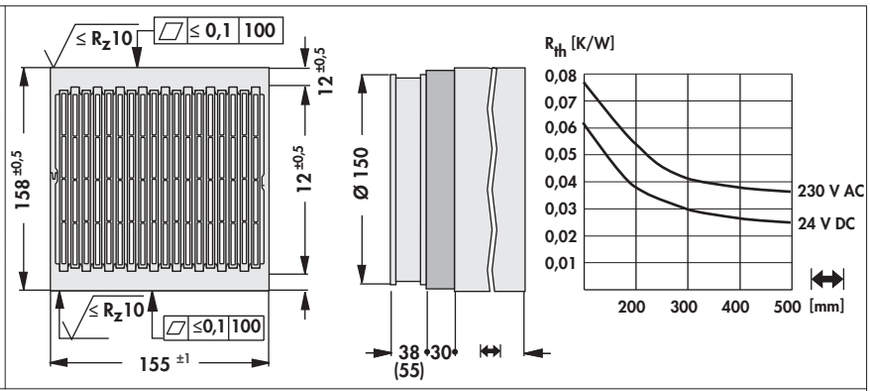
	with air flow chamber	

please indicate: **... ↔**
200 300 400 mm

... fan type
24 = 24 V DC
230 = 230 V AC

Technical data of the fans

	... 24	... 230
type	ebmpapst, ball bearing, with grid	ebmpapst, ball bearing, with grid
dimensions	∅150x38 mm	∅150x55 mm
tension	24 V DC	230 V AC
power inout	19 W	47 W
max. air volume	420 m^3/h	380 m^3/h
temperature range	-25°C... +72°C	-30°C... +60°C
noise level	59 dB(A)	60 dB(A)
speed	3,350 min^{-1}	2,700 min^{-1}
weight	620 g	1,100 g
failure rate (L_{10})	L_{10} > 75,000 h (40°C)	L_{10} > 40,000 h (40°C)

EL.ITALIA
www.elitaliaweb.it
info@elitaliaweb.it
+39 0233611626