METAL BODIED SAFETY LIMIT SWITCHES SN62 SERIES

SUNS products help to make factories run more efficiently, product manufacturing smarter, and automation environments more productive.

Features

- Aluminum die cast body
- Earth grounding surface on same level as switching
- Easily interchangeable contact block
- Galvanically separated contacts
- Screw terminals with self-lifting clamps for easy wiring
- Positive Opening of NC contacts
- 4 x 90° actuator positions
- Cable entry available: M20, PG13.5 and 1/2"NPT

Definitions of Operating Characteristics

OF	Operating Force
RF	Releasing Force
OT	Overtravel
TT	Total Travel
PT	Pretravel
MD	Movement Differential
OP	Operating Position
PO	Travel to Positive Opening

Specifications

Operating Speed	0.05mm-2m/sec
Operating Frequency	Mechanical: 120ops/min Electrical: 30 ops/min
Insulation Resistance	>100MΩ@500V DC
Contact Resistance	<25mΩ (initial value)
Rated Thermal Current	10A/600V AC (EN60947-5-1) UL/cUL Listed (E216958) AC15 A600 / DC13 Q300
Dielectric Strength	1000VAC for 1 min between current carrying parts 2500VAC for 1 min between non-current carrying parts
Service Life	Mechanically 1.0 x10^7 (operations) Electrically 5 x10^5 (operations)
Operating Temperature	-25~+80°C (-13~176°F) with no icing
Humidity	< 95%RH
Weight	220-300g
Degree of Protection	IP67

Selection Guide:

SN62 (Body Styles) — 04 (Head Styles) — SP — C — - — R — (AB)

SP:
- SP: 1NO/1NC Snap action
- SPT: 2NO/2NC Snap action
- SL: BBM 1NO/1NC Slow Action changeover
- SL1: MBB 1NO/1NC Slow Action Overlapping
- SL2: 2NC Slow Action
- SL3: 2NO Slow Action
- SL4: 3NC Slow Action
- SL5: 3NO Slow Action
- SL6: BBM 2NC/1NO Slow Action changeover
- SL7: MBB 2NC/1NO Slow Action Overlapping
- SL8: BBM 2NO/1NC Slow Action changeover
- SL9: MBB 2NO/1NC Slow Action Overlapping

C: Conduits
- A: 1/2"NPT
- B: PG13.5
- C: M20

R:
- Blank
- R: with Reset

(AB): Aluminum alloy swing arm

tel. 02.3361.1626 info@elitaliaweb.it
fax 02.2626.1009 www.elitaliaweb.it

METAL BODIED SAFETY LIMIT SWITCHES SN62 SERIES

Available contact blocks and travel diagrams

ON OFF

Plunger type
11,12 Styles

Side rotary type
04, 07, 08, 14, 18, 09 Styles

72, 73 Styles

05 Styles

00, 66,69 Styles

SP
1NO/1NC
Snap Action

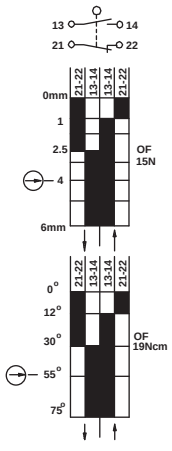

SPT
2NO/2NC
Snap Action

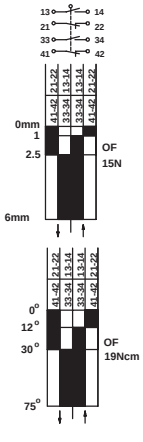

SL
1NO/1NC
Slow Action
(Changeover)

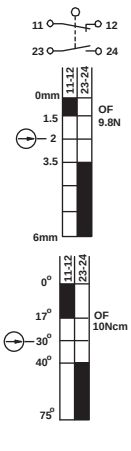

SL1
1NO/1NC
Slow Action
(Overlapping)

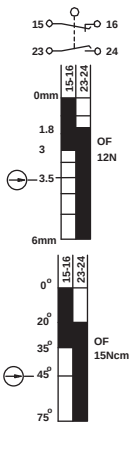

SL2
2NC
Slow Action

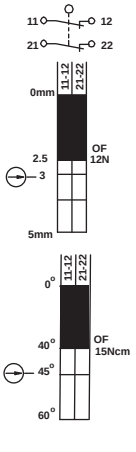

SL3
2NO
Slow Action

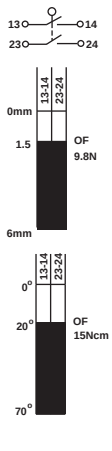

SL4
3NC
Slow Action

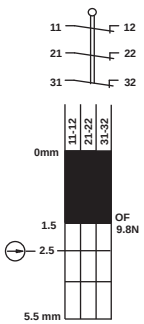

SL5
3NO
Slow Action

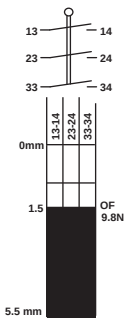

SL6
2NC/1NO
Slow Action
(Changeover)

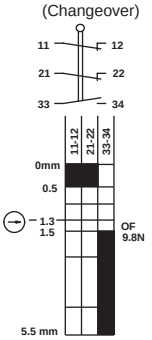

SL7
2NC/1NO
Slow Action
(Overlapping)

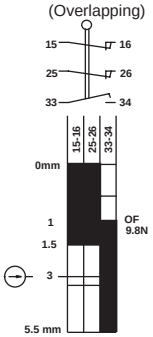

SL8
1NC/2NO
Slow Action
(Changeover)

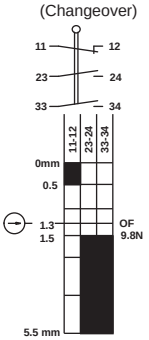

SL9
1NC/2NO
Slow Action
(Overlapping)

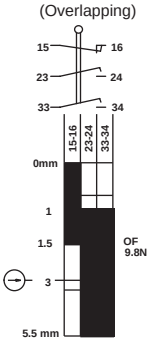

tel. 02.3361.1626 info@elitaliaweb.it
fax 02.2626.1009 www.elitaliaweb.it

SN6211

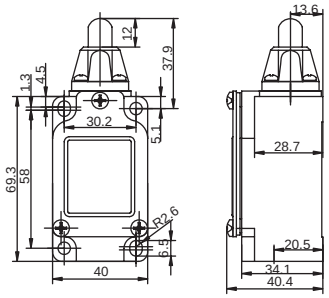

Order Code		Contact block		
SN6211-SP- _	SP	snap action	1NO+1NC	
SN6211-SL- _	SL	slow action	1NO+1NC	BBM
SN6211-SL1- _	SL1	slow action	1NO+1NC	MBB
SN6211-SL2- _	SL2	slow action	2NC	

SN6212

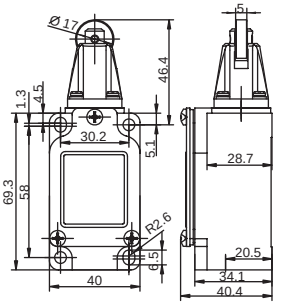

Order Code		Contact block		
SN6212-SP- _	SP	snap action	1NO+1NC	
SN6212-SL- _	SL	slow action	1NO+1NC	BBM
SN6212-SL1- _	SL1	slow action	1NO+1NC	MBB
SN6212-SL2- _	SL2	slow action	2NC	

SN6205

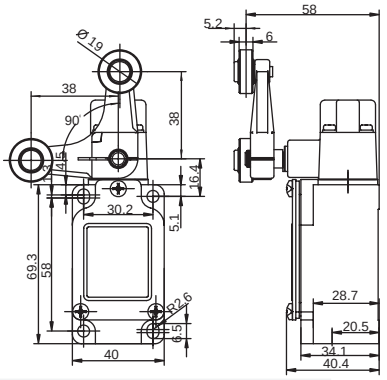

Order Code		Contact block		
SN6205-SP- _	SP	snap action	1NO+1NC	
SN6205-SL- _	SL	slow action	1NO+1NC	BBM

SN6208

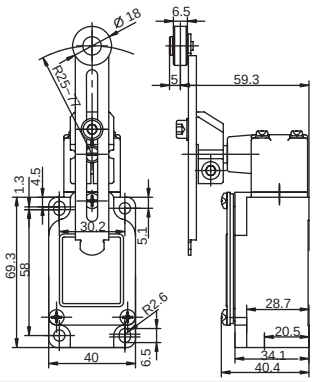

Order Code		Contact block		
SN6208-SP- _	SP	snap action	1NO+1NC	
SN6208-SL- _	SL	slow action	1NO+1NC	BBM
SN6208-SL1- _	SL1	slow action	1NO+1NC	MBB
SN6208-SL2- _	SL2	slow action	2NC	

SN6204

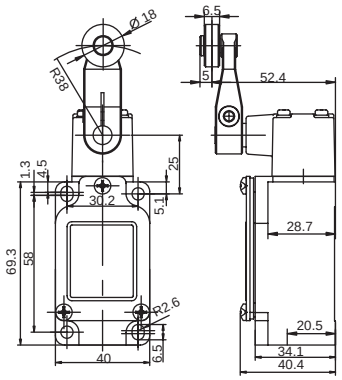

Order Code		Contact block		
SN6204-SP- _	SP	snap action	1NO+1NC	
SN6204-SL- _	SL	slow action	1NO+1NC	BBM
SN6204-SL1- _	SL1	slow action	1NO+1NC	MBB
SN6204-SL2- _	SL2	slow action	2NC	

SN6207

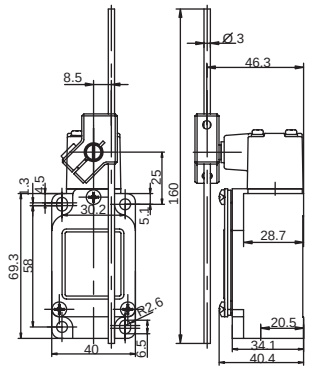

Order Code		Contact block		
SN6207-SP- _	SP	snap action	1NO+1NC	
SN6207-SL- _	SL	slow action	1NO+1NC	BBM
SN6207-SL1- _	SL1	slow action	1NO+1NC	MBB
SN6207-SL2- _	SL2	slow action	2NC	

SN6272

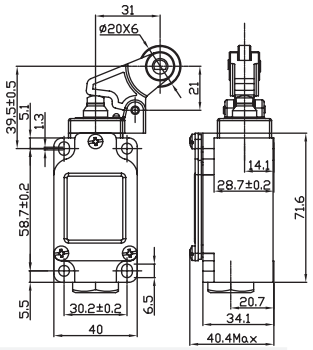

Order Code		Contact block		
SN6272-SP- _	SP	snap action	1NO+1NC	
SN6272-SL- _	SL	slow action	1NO+1NC	BBM
SN6272-SL1- _	SL1	slow action	1NO+1NC	MBB
SN6272-SL2- _	SL2	slow action	2NC	

SN6273

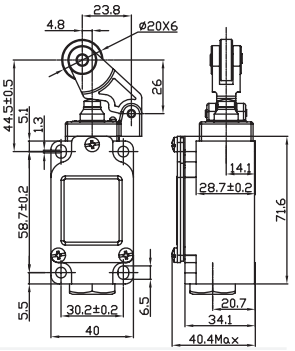

Order Code		Contact block		
SN6273-SP- _	SP	snap action	1NO+1NC	
SN6273-SL- _	SL	slow action	1NO+1NC	BBM
SN6273-SL1- _	SL1	slow action	1NO+1NC	MBB
SN6273-SL2- _	SL2	slow action	2NC	

SN6200

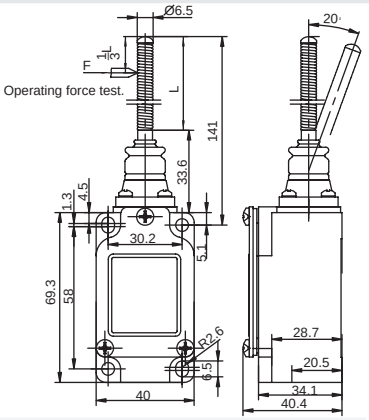

Order Code			
SN6200-SP- _	SP	snap action	1NO+1NC

SN6266

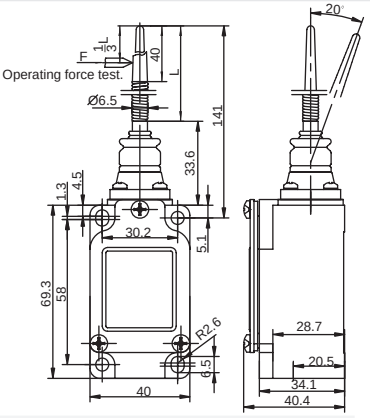

Order Code			
SN6266-SP- _	SP	snap action	1NO+1NC

SN6269

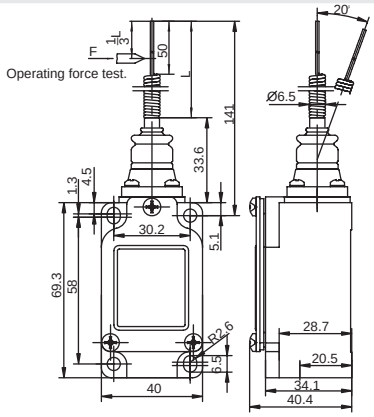

Order Code			
SN6269-SP- _	SP	snap action	1NO+1NC

SN6209

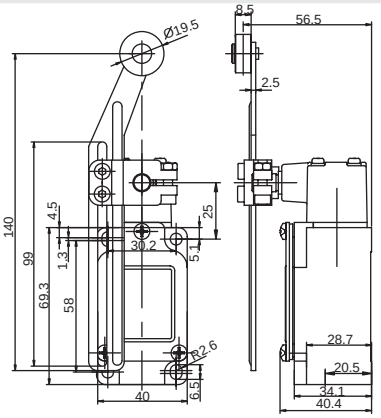

Order Code		Contact block		
SN6209-SP- _	SP	snap action	1NO+1NC	
SN6209-SL- _	SL	slow action	1NO+1NC	BBM
SN6209-SL1- _	SL1	slow action	1NO+1NC	MBB
SN6209-SL2- _	SL2	slow action	2NC	

tel. 02.3361.1626 info@elitaliaweb.it
fax 02.2626.1009 www.elitaliaweb.it

SN6214

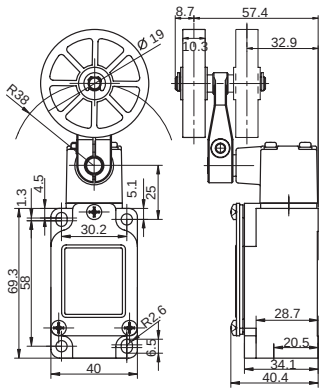

Order Code		Contact block		
SN6214-SP- _	SP	snap action	1NO+1NC	
SN6214-SL- _	SL	slow action	1NO+1NC	BBM
SN6214-SL1- _	SL1	slow action	1NO+1NC	MBB
SN6214-SL2-	SL2	slow action	2NC	

SN6218

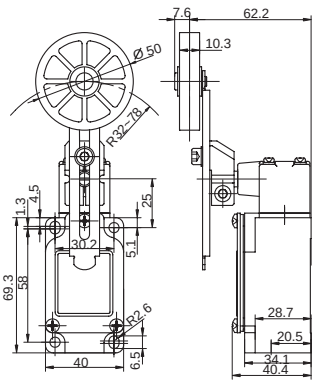

Order Code		Contact block		
SN6218-SP- _	SP	snap action	1NO+1NC	
SN6218-SL- _	SL	slow action	1NO+1NC	BBM
SN6218-SL1- _	SL1	slow action	1NO+1NC	MBB
SN6218-SL2-	SL2	slow action	2NC	

SN6211-L

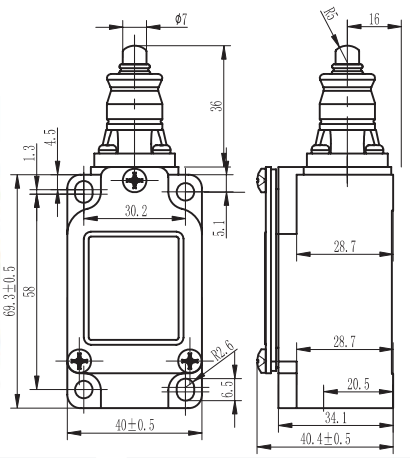

Order Code		Contact block		
SN6211-SP- _L	SP	snap action	1NO+1NC	
SN6211-SL- _L	SL	slow action	1NO+1NC	BBM
SN6211-SL1- _L	SL1	slow action	1NO+1NC	MBB
SN6211-SL2- _L	SL2	slow action	2NC	